MAGNOLIA MICROSYSTEMS

MAGNOLIA MICROSYSTEMS
MAGNOLIA MICROSYSTEMS
MAGNOLIA MICROSYSTEMS
MAGNOLIA MICROSYSTEMS

# INSTALLING MAGNOLIA MICROSYSTEMS' 77316 DOUBLE DENSITY DISK CONTROLLER in a HEATH/ZENITH Z89 or Z90 COMPUTER SYSTEM

MAGNOLIA MICROSYSTEMS, INC.
2264 - 15th Ave. W. • Seattle, WA 98119

## LIMITED 90-DAY WARRANTY

Magnolia Microsystems, Inc. warrants to its Dealer (End User only if purchased directly from MMS, Inc.) that the HARDWARE portion of this product is free from defects in materials and workmanship for a period of 90 days following purchase. Defective products will be repaired or replaced at our option when examination discloses that the product has not been misused or abused and that a defect exists. End Users must return the product to the Dealer from whom it was purchsed for warranty claims.

All SOFTWARE/FIRMWARE is supplied "AS-IS", with no warranty as to its merchantability or fitness for any specific use. This document should be studied BEFORE BREAKING THE SEAL on the package. The product may be returned for refund or credit ONLY if the package remains sealed.

## IF YOU HAVE PROBLEMS -----

1. Most problems result from failure to follow instructions EXACTLY. Return to the manual and review the procedure. Start at the beginning and retrace each step, keeping written notes of any possible deviations from what should have happened. If the problem is still not resolved, make a written record of the FULL configuration prior to calling your dealer for assistance. As a minimum, note all hardware components, including make and model numbers (revision dates, serial numbers, etc. may be necessary to find a defective hardware element) and note all software in use by name and version number (version numbers usually appear in the sign-on string). Use SETUP and DRIVES to obtain a complete operating system description.

2. Call your dealer with the above information, preferably with the computer at hand. (Call Magnolia ONLY if you purchased direct; to assure the best quality support, we have found it vital to have the dealer involved from the beginning).

3. How things work together is the responsibility of the Systems Integrator. If you bought a system or subsystem from a single source, then that supplier is responsible for those pieces working together. If you bought components or subsystems from multiple suppliers, then YOU have assumed the role of Systems Integrator and must expect to perform that function, or pay someone to perform it for you. Magnolia products are designed, and priced, for non-experts putting together a few standard configurations, while allowing experts a great deal of flexibility in meeting special requirements. Magnolia's responsibility in the latter situation is limited to providing the features we document and meeting appropriate industry standards.

(c) 1982
Magnolia Microsystems, Inc.
2264 - 15th Avenue West
Seattle, WA 98119

## INSTALLATION OF MAGNOLIA MICROSYSTEMS DOUBLE DENSITY FLOPPY DISK CONTROLLER

The MMS 77316 Double Density Disk Controller is installed in three (3) separate phases, each of which has its own documentation:

1. Monitor EPROM Installation
2. Double Density Disk Controller Card Installation
3. Software Installation

This document ONLY describes phase 2 of the procedure.

If you have not yet installed your new Monitor EPROM (phase 1), refer to the separate MMS MONITOR EPROM document before continuing.

Your computer must be "ORG-0" CP/M compatible before you can utilize the MMS controller and the CP/M operating system. All current production computers are compatible, as are computers which have had either the Heath 89-7 or Magnolia 77312 CP/M modification kits installed. If the IC at U517 on your CPU board is marked "444-42" your machine **IS NOT** CP/M compatible. Contact your dealer and obtain the appropriate upgrade kit.

This new controller requires that "soft-sectored" 5-inch media be used, not the "10-sector" media used by the single density Heath/Zenith controller. Suggested media for 40 track drives is DYSAN 104 or 104/2D; for 80 track drives (96 tpi) DYSAN's 204/2D is recommended.

## DOUBLE DENSITY DISK CONTROLLER PACKAGE

The Double Density controller package includes the following hardware:

1. Double Density Disk Controller Card P/N 77316
2. A 4-1/2 inch 14-conductor ribbon cable jumper
3. New Monitor EPROM Package
4. New I/O Decode PROM, P/N 444-61C
5. New 5-volt Power Supply Regulator, P/N 78H05, with Heat Sink.
6. A 34-conductor ribbon cable for (2) 5-inch disk drives
7. A 50-conductor ribbon cable for (2) 8-inch disk drives
8. 4 washers to increase hinge clearance for drive cables

The following software is included:

1. An 8-inch Double Density Bootable CP/M disk
2. A 5-inch Double Density Bootable CP/M disk

This document is not intended to fully describe the CP/M operating system. Refer to your MMS CP/M USERS MANUAL and the Digital Research CP/M documentation for details on operating your CP/M system.

## HARDWARE INSTALLATION

1. **Remove the Cover from your '89:**

   a. Unplug your computer.

   b. Release the cover latch plates. Refer to the inset on the illustration.

   c. Tilt the cabinet shell back until it clears the vertical logic boards.

   d. Unplug the fan cable

   e. If necessary, slide the shell to the left to remove from hinges and set aside.

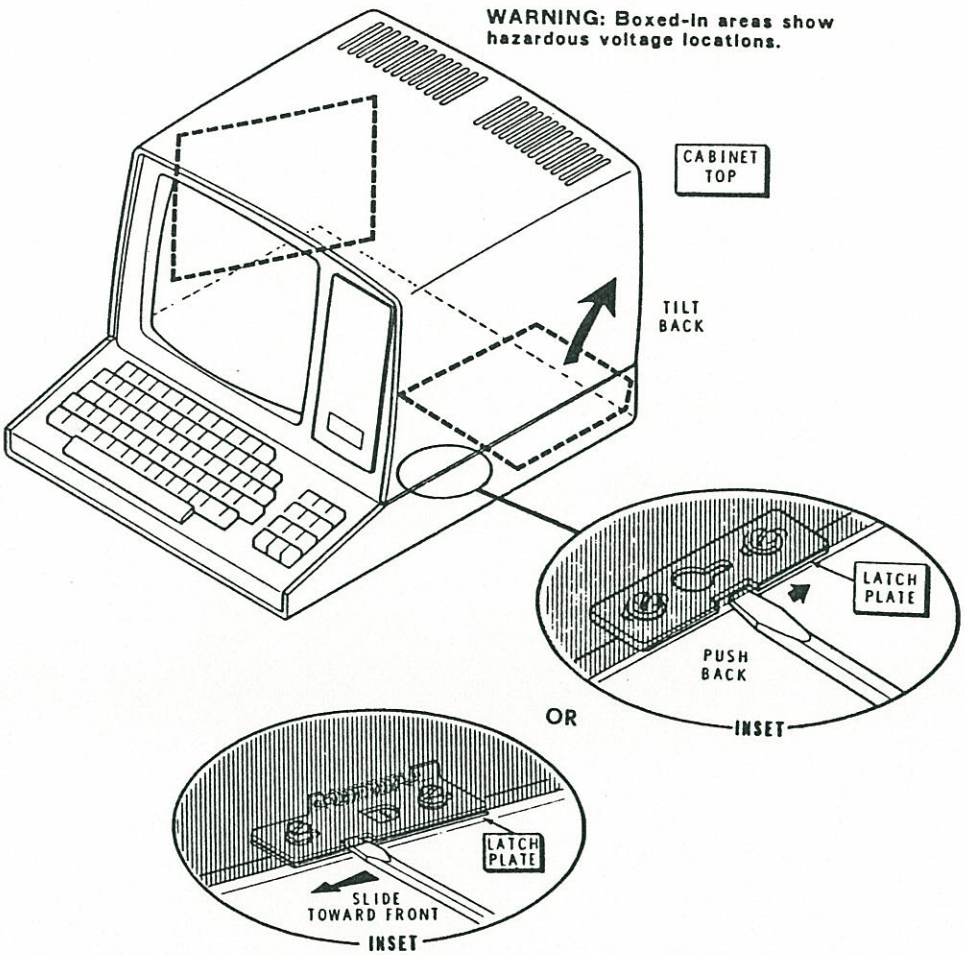

**2. Upgrade the existing 5-volt Power Supply:**

NOTE: Newer computers are being built with the higher-capacity power supply and do not need to be upgraded. If your computer has black heat sinks on U101, U102, and U103 on the power supply AND U101 is market '78H05', '78T05', or '442-651' SKIP TO STEP 3. OTHERWISE,

a. Remove the Power Supply Assembly from the computer
   1. Unplug 3 or 4 Cables
   2. Remove 4 screws and Printed Circuit assembly
   3. Remove 4 hex spacers, then rotate Heat Sink bracket assembly clockwise 90 degrees so that the regulator mounting screws face the rear of the machine.

b. Remove existing 5-volt regulator U101, using care to not get Heat Sink compound on yourself or clothes.

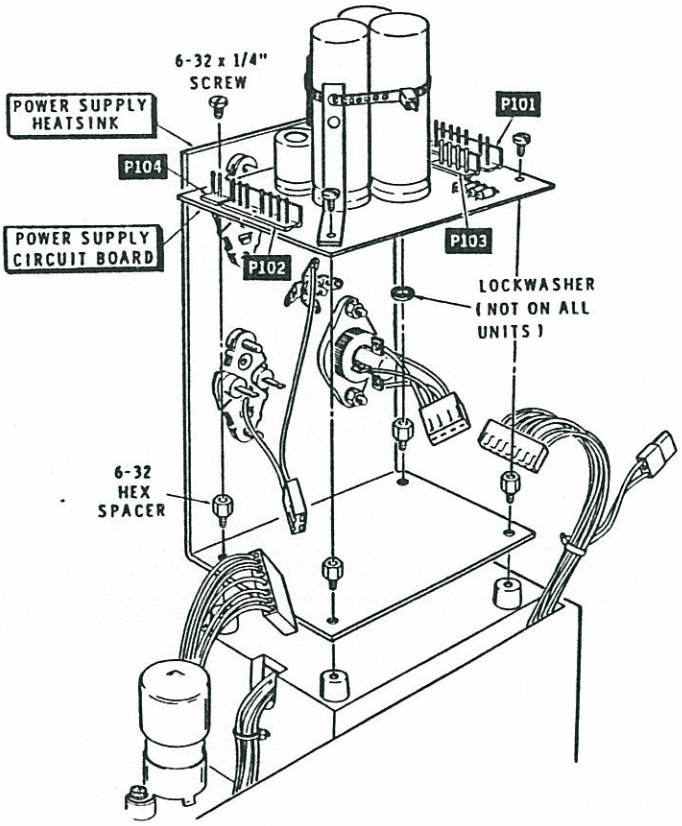

c. Install the new Heat Sink and 5-volt regulator 78H05 as shown. Use Heat Sink compound left on the assembly from the previous step.

d. Re-install Power Supply Assembly in the computer
   1. Rotate Heat Sink assembly back into place and fasten with 4 HEX spacers.
   2. Replace Printed Circuit assembly and install 4 screws.
   3. Re-Connect Cables as shown -- use caution to connect correctly.

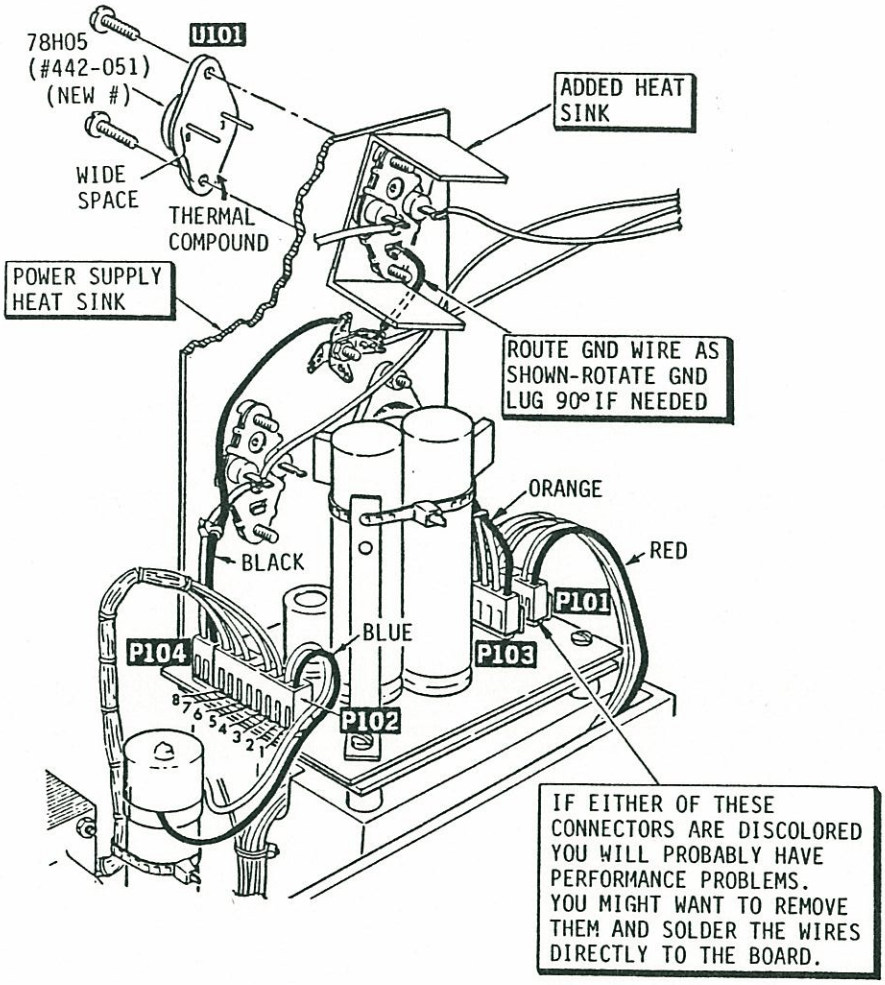

e. Plug in the '89, and Turn On. Verify that it still beeps, and the "MMS:" or other prompt appears.

If so, Turn Off, Unplug, and continue with next step. If it does not operate properly (as it did before modifying the Power Supply), check your work and verify that the new 5-volt regulator is working properly. Obtain local technical assistance if necessary.

**3. Install replacement I/O decode PROM:**

**NOTE:** All ICs are easily damaged by static electricity. Keep them in black conductive foam when not installed in the '89. Avoid wearing static-generating garments when working with them.

If you did not change your I/O decode PROM (U550) when installing your new Monitor EPROM, do it now. Replace the 20-pin IC at U550 (444-43 or 444-61 or 444-61A) with **444-61C**. Make sure that the new part is installed with the 'notched' end (pin 1) UP.

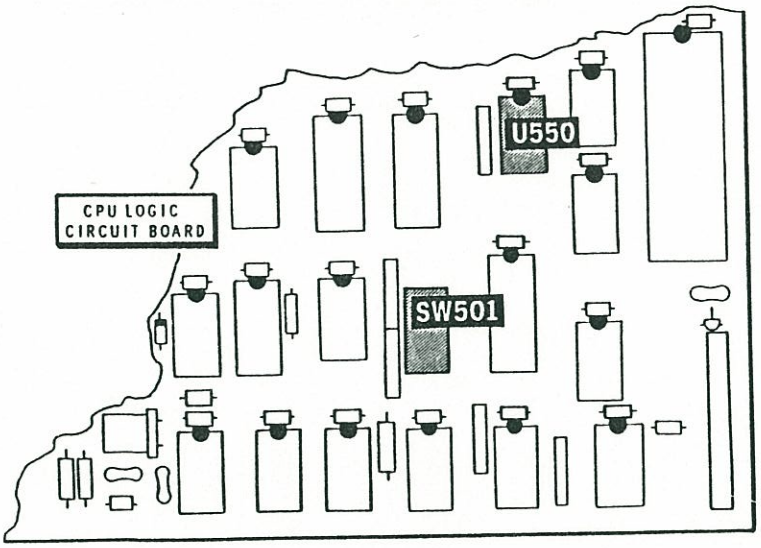


**4. Select the desired default boot device:**

Set SW501 as instructed in your MONITOR EPROM document. If you have another controller (say, the Heath Hard-Sector Single Density) in your computer, leave it selected as the default controller until testing is completed.

**5. Install the Controller Card in the '89:**

a. Remove the accessory mounting bracket from the right side of the machine.

b. If the right-most slot is empty, plug the new controller onto P506 and P512. Otherwise, use either of the other two positions.

c. Connect the 14-conductor DIP cable jumper from the empty socket at 8B on the controller card to U553 on the CPU board. The striped edge of the cable can be either "up" or "down", but the cable must not be twisted from end-to-end.

d. Replace the accessory mounting bracket.

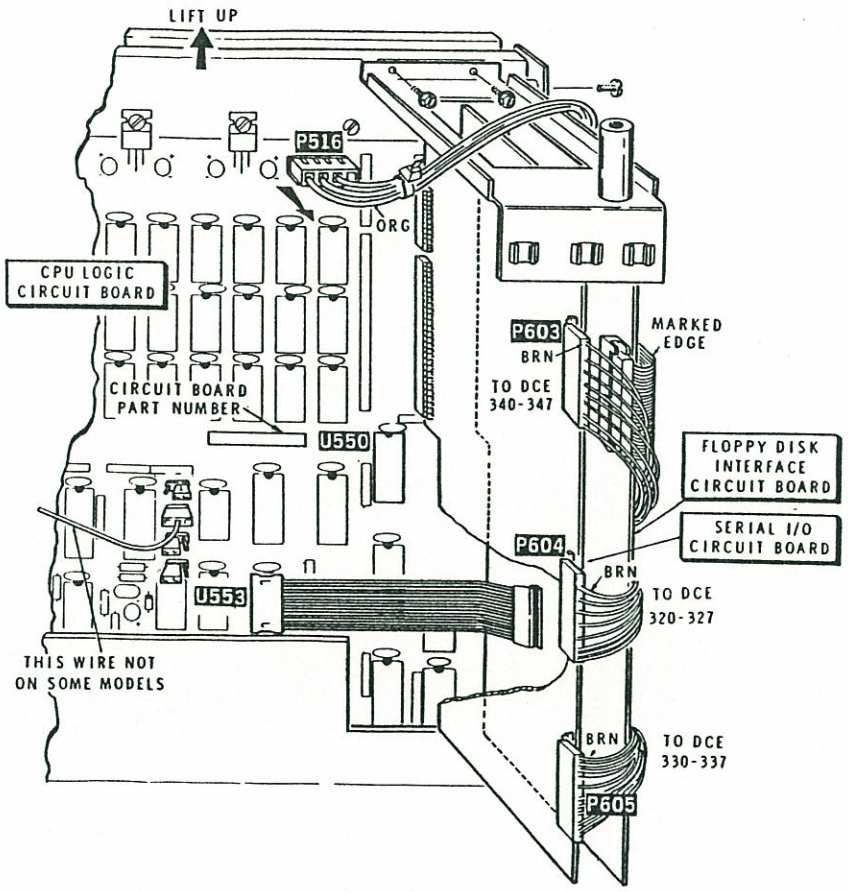

**6. Install the disk drive cables:**

a. Connect the new disk drive cables to the appropriate connectors on the new controller board: 34-conductor (5-inch) to the 34-pin connector and 50-conductor (8-inch) to the 50-pin connector. Pin 1 (striped edge of cable) goes "up" in both cases. If you only have one size drive, the second cable may be omitted.

b. Route the cables over the top of the CPU and Terminal Logic boards and out the back of the computer. DO NOT attempt to use the internal drive at Double Density, as satisfactory performance is not possible.

c. Remove the hinges from the computer's cover and re-install with a #6 washer on each screw between the hinge and cover to allow clearance for the disk drive cables between the cover and base.

d. Replace the cover on the '89, re-connecting the fan.

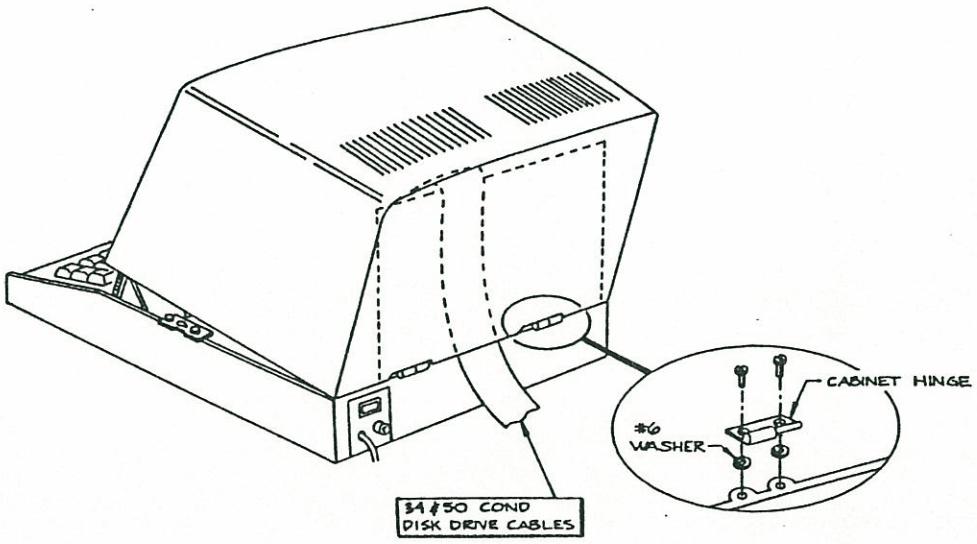

**7. Plug the '89 in and turn it on:**

It should beep twice and the "MMS:" or other prompt should appear. If you have the Heath/Zenith single-density controller installed, it will now boot with the command "Boot 0(cr).

Verify that the computer still operates correctly. If not, check your work and obtain local technical assistance if necessary.

**8. Connect your disk drives to the new cables:**

If you did not purchase your disk drives from Magnolia Microsystems together with this controller, refer to Appendix A for details on configuring them properly.

If you are using 5" drives formerly used as B: and C: on your single density Heath/Zenith controller, the drive previously addressed as C: will now be A: **without changing anything except the cable** because Heath has selected the internal drive using DS3. Drive B: will still be B:!

This completes the Hardware Installation. Install your CP/M operating system software using the "MMS CP/M USERS GUIDE"

## REMOVING THE Z89-37 CONTROLLER

NOTE: After installing the MMS 77316 Double Density Controller in a computer which contains a Zenith Double Density Controller (Z89-37), you may wish to remove the Z89-37 to reduce heat build-up in the machine and free an expansion slot for other use.

When removing the Z89-37 board, two ICs (which were removed when the Z89-37 was installed) must be returned to the CPU board before the computer will be operational:

1. U557 (where the ribbon cable to the Z89-37 board connected) must contain a 74LS148. You may remove one from U3 on the Z89-37 board if necessary.

2. U558 (where a 20-pin DIP plug was installed) must contain a 74LS240. You may remove one from U2 on the Z89-37 board if necessary.

Make sure that both U557 and U558 are installed with the notched end toward the Right side of the CPU board.

## IN CASE OF DIFFICULTY

Contact the Dealer from whom you purchased the Double Density Controller. If they cannot answer your questions, have them call our technical support department for assistance in resolving your problem. Consultation with Magnolia Microsystems staff is available at our standard Consulting Rates if you did not purchase the controller directly from MMS.

 

# APPENDIX A

## CONFIGURING YOUR DISK DRIVES

Most 5" and 8" disk drives are compatible with this controller. The following information, together with the drive manufacturer's technical manual, should enable you to configure your drives properly. A partial schematic of the Double Density controller is provided on the last page for reference.

Consultation with Magnolia Microsystems staff regarding disk drive configuration is available at our standard Consulting Rates if you did not purchase your DRIVES from MMS.

### 5-INCH DRIVES

Configure all 5.25" drives to be used with this controller for "Head-load with Select" (HS) and the appropriate drive-select (DS1, DS2, DS3, DS4). All but one of these drives should have the resistor-termination package removed, and if both single- and double-sided drives are used the termination should be in a double-sided drive.

Remember that Heath chose a non-standard convention for drive select with their single density controller: the first drive is selected with DS3, the second with DS2, and the third with DS1; just the reverse of industry standard.

The following chart shows the configuration jumpers for several popular drives. Jumper position "1" is closest to the edge of the printed circuit board on the drive itself. Contact your DRIVE VENDOR if you need further details.

| Position | Siemens | Tandon (1) | MPI (2) | 1st Drive | 2nd Drive |
|---|---|---|---|---|---|
| 1 | HS | HS | HS | closed | closed |
| 2 | DS1 | DS1 | DS0 | closed | open |
| 3 | DS2 | DS2 | DS1 | open | closed |
| 4 | DS3 | DS3 | DS2 | open | open |
| 5 | MX | MX | MX | open | open |
| 6 | na | DS4 | DS3 | open | open |
| 7 | HM | HM | HM | open | open |
| 8 | | na | | | |

Notes:
(1) Tandon drives don't use HM or HS, but jumper positions are provided for compatability
(2) MPI starts numbering DS at "0" instead of "1", but functions are the same

Use care when "opening" a link on a jumper block, it is best to bend the pin OUT and plug the complete block back in the socket, instead of trying to actually CUT the link. If the pin is bent 'in' or 'under' it may still make intermittent contact with the socket.

## 8-INCH DRIVES

Configure all 8" drives for "Radial Head Load" and the proper drive-select (DS1, DS2, DS3, or DS4). Only one of these drives should be terminated, and if both single- and double-sided drives are used the termination should be in a double-sided drive.

The following chart shows ONLY what jumpers must be CHANGED from the STANDARD factory delivered configuration. See your drive manual for jumper and/or switch locations, as well as detailed information on the standard jumper configuration. Contact your DRIVE VENDOR if you need further information.

| Drive Manufacturer and Model Number | Jumper Changes Open | Short | Comments |
|---|---|---|---|
| Shugart SA800/801 | 801, HL, B | 800, T2 DS, C | Short T1, T3, T4, T5, T6 on one drive only |
| Shugart SA850/851 | 851, HL, B | 850, DS, C | |
| Qume 842 | HL, B | DS, C | Previously called DT8 |
| Tandon TM848-2 | HL, B | DS, C | |

---- Magnolia has less experience with the following drives, the following guidelines may be helpful:

| | | | |
|---|---|---|---|
| Memorex 550 | HL, B | DS, C | |
| CDC 9406-4 | IU, B | CC, C | |
| Siemens 200-8 | none | none | Use factory-standard jumpers |
| Remex 2000 | 2001 HL, B | 2000 DS, C | Leave A and X jumpered |
| Remex 4000 | 4001 HL, B | 4000 DS, C | Leave A and X jumpered |

**REMEMBER:** REMOVE the DIP terminator resistors from all EXCEPT the last drive, and jumper only ONE 'DSn' on each drive.

# APPENDIX B
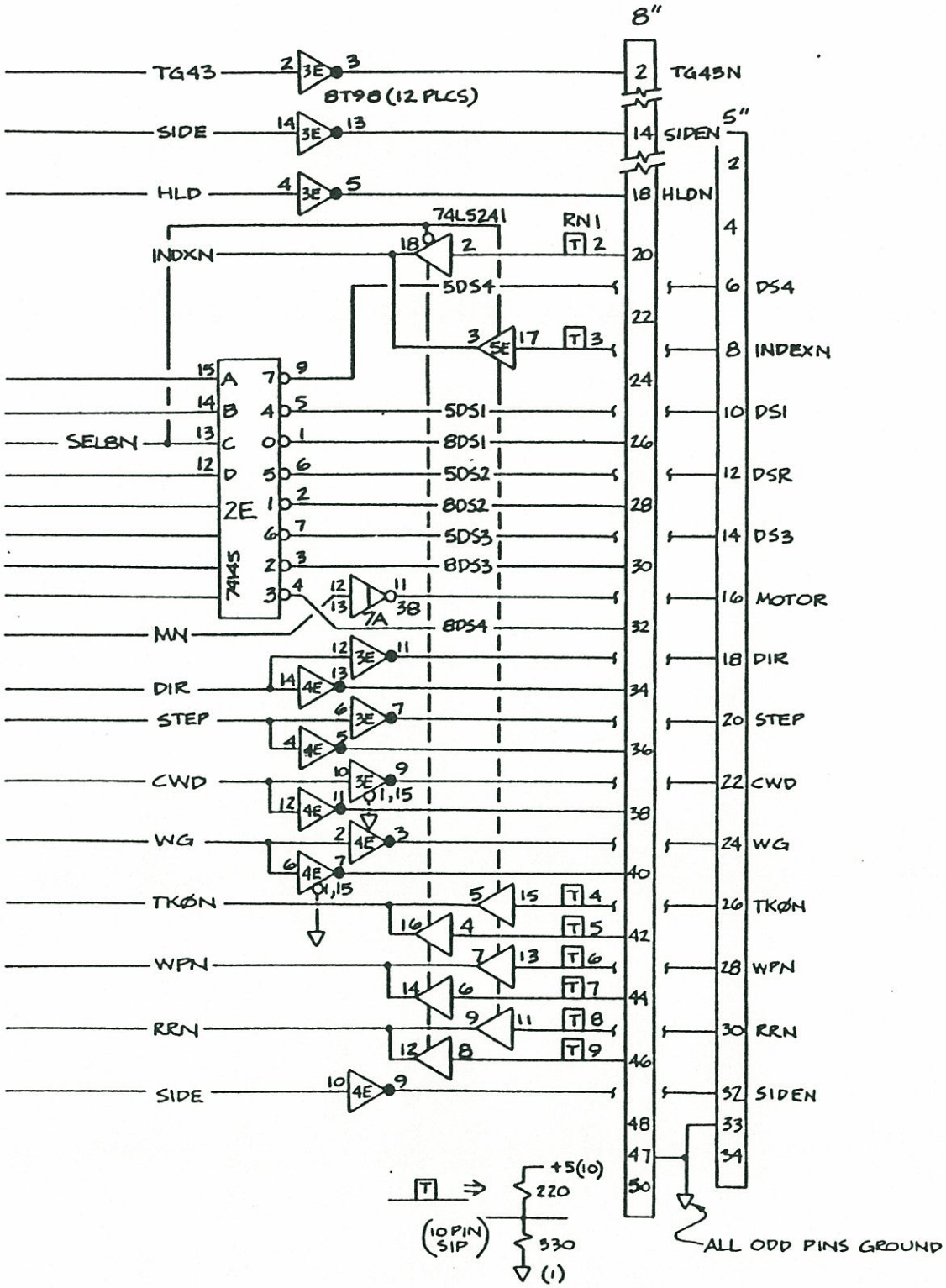
## PARTIAL SCHEMATIC DIAGRAM - DOUBLE DENSITY CONTROLLER