DOUBLE-DENSITY DISK
CONTROLLER
Model Z-89-37

OPERATION MANUAL 595-2674-04

Operation Manual

ZENITH
data systems

DOUBLE-DENSITY DISK CONTROLLER
Model Z-89-37

OPERATION MANUAL 595-2674-04

ZENITH DATA SYSTEMS
SAINT JOSEPH, MICHIGAN 49085

Copyright © 1981
Zenith Data Systems
All Rights Reserved
Printed in the United States of America

TABLE OF CONTENTS

Introduction 3

Computer Cabinet Removal 5

Diagnostic Routines 7
- Disk Controller Checkout 10
- General Drive/Controller Diagnostic 13
- Decimal to Octal to Hex to ASCII Conversion 22

Reconfiguration 23

In Case of Difficulty 29

Recalibration 31

Circuit Description 35

Replacement Parts List 41

Semiconductor Identification Chart 43

Block Diagram ..... (Illustration Booklet, Page 4)
Circuit Board X-Ray View ..... (Illustration Booklet, Page 5)

Appendix A — FD179X Data Information A-1

Appendix B — FD179X Application Notes B-1

Appendix C — WD1691 Data Information C-1

Appendix D — WD2143-01 Data Information D-1

Schematic ..... (fold-in)

INTRODUCTION

The Z-89-37 Double-Density Disk Controller allows double-density operation with your Z-89 or Z-90 series computer. The Controller will read from — or write to — drives using soft-sectored disks as follows:

Double-Sided (H-17-4 drives):

96 tracks per inch
80 tracks per side
Single or double density

Single-Sided (H-17-1 drives):

48 tracks per inch
40 tracks
Single or double density

Required software is:

HDOS version 2.0 (with update HOS-5-UP)
or
CP/M version 2.2.03 (or higher)

NOTICE: If you have purchased a Z-87 Floppy Disk System to be used with a Z-89 or Z-90 Computer, proceed to "Reconfiguration" and, if necessary, reprogram (rearrange) the drive numbers in your Z-87 Floppy Disk (see Page 26).

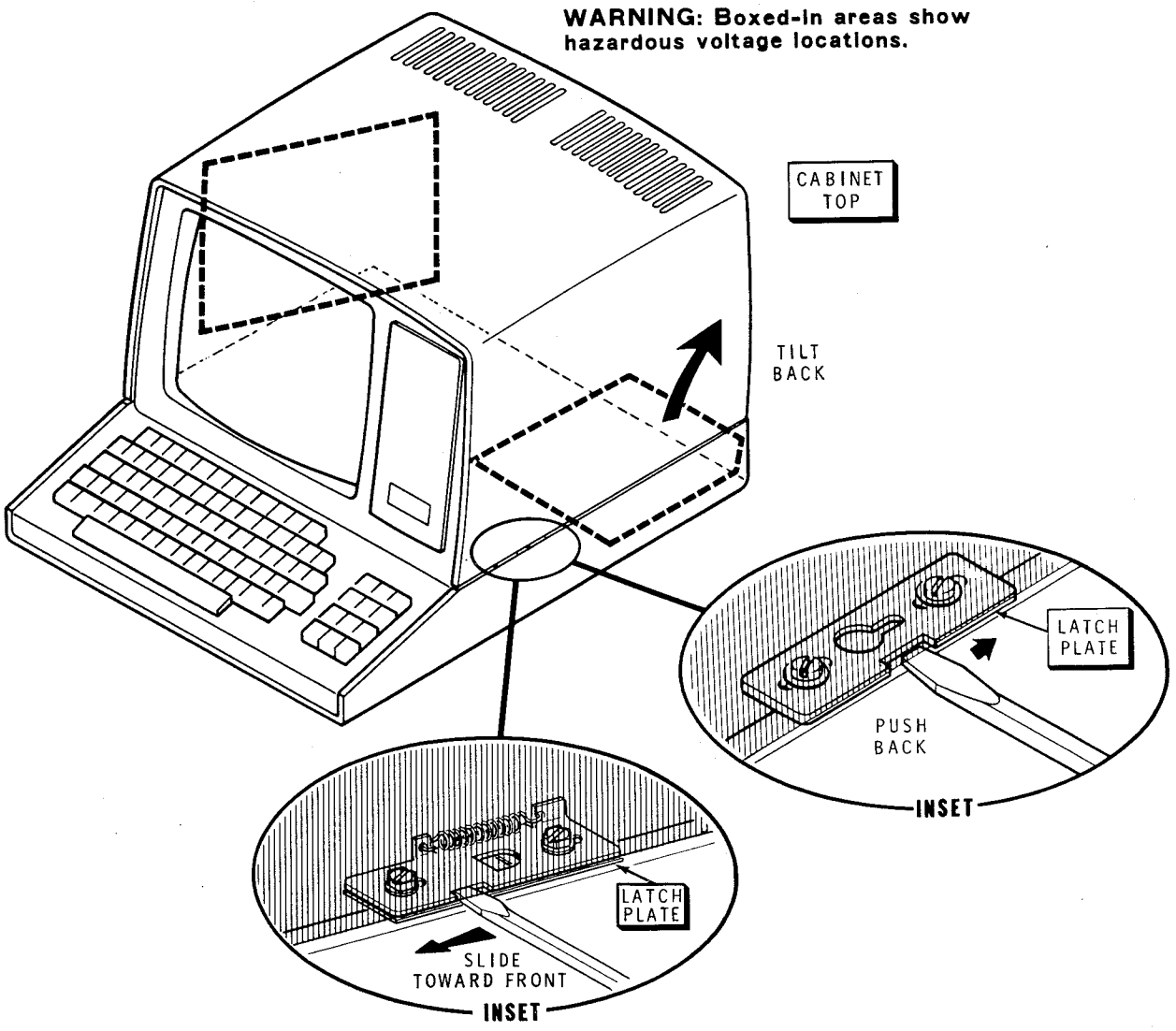
WARNING: Boxed-in areas show hazardous voltage locations.
CABINET TOP
TILT BACK
LATCH PLATE
PUSH BACK
INSET
LATCH PLATE
SLIDE TOWARD FRONT
INSET

PICTORIAL 1

COMPUTER CABINET REMOVAL

Whenever you need to remove the cabinet shell:

- Refer to the inset drawing on Pictorial 1, insert the blade of a small screwdriver onto the notch in the latch plate, and then slide the latch plate as shown in the inset drawings.
- Likewise, open the latch plate on the other side of the cabinet shell.
- **WARNING:** When the line cord is connected to an AC outlet, hazardous voltages can be present inside your Computer. See Pictorial 1.
- Carefully tilt the cabinet shell back. NOTE: The hinges are designed so you can easily remove the cabinet shell once you have opened it completely.
- Unplug the fan.

Reverse this procedure to close and lock the cabinet shell back on the Computer.

DIAGNOSTIC ROUTINES

The diagnostic diskette supplied with your disk controller (not supplied with Z-90 series Computers) allows you to "check out" or troubleshoot your disk system and software. Hard-sectored diskettes are used by the single-density controller; soft-sectored diskettes are used by the double-density controller, Z-89-37.

The diagnostic routines are supplied on a 5.25 inch bootable diskette labeled "Soft Sectored." Customers also receive a diskette labeled "Hard Sectored." The only difference between these diskettes is the type of media. Otherwise, the programs that the diskettes contain are identical. You can use either diskette to perform the diagnostics, but be sure to use the diskette labeled "Soft Sectored" only in disk drives that are connected to the Z-89-37 Controller. You can use the hard-sectored diskette in an H-17, H-77, or Z-87 with an H-88-1 (hard sectored) floppy disk interface.

Those who have single-sided disk drives or are uncertain whether they have installed the Controller or disk drives correctly, should boot-up the diskette labeled "Hard Sectored" in a hard-sectored disk drive connected to an H-88-1, single-density, floppy disk controller, and then run the diagnostics from the hard-sectored diskette.

To perform the diagnostics, you will need at least two blank, 5.25-inch, soft-sectored diskettes. It does not matter whether these soft-sectored diskettes are single or double density, nor whether they are single or double sided.

HARDWARE UNIT NUMBERS

The various diagnostic programs refer to numbers by means of which the computer recognizes each individual disk drive. These numbers are called hardware unit numbers. Pictorial 2 shows an example of hardware unit numbers for several disk drives. The association between a particular drive and a hardware unit number is determined by the programming jumper on the drive (see "Reconfiguration", Page 25). Depending on how your system is configured, you may wish to alter the drive programming. It is not actually **necessary** (mandatory) that you do so unless two drives have the **same** hardware unit numbers. The drive Checkout on Page 12 will verify which drive is which hardware unit if you are unsure. The unit which comes on during bootup (as indicated by the lighting of the red light on the front of the drive) is unit 0.

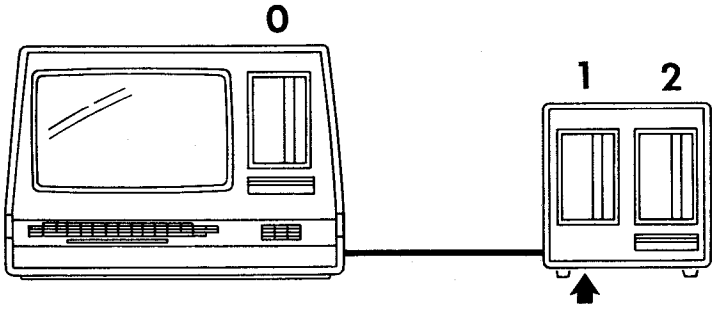

PICTORIAL 2

STARTING THE DIAGNOSTIC PROGRAMS

To start the diagnostic programs, boot up the system using either the hard- or soft-sectored Diagnostic Utilities diskette. The following procedure outlines how you should boot-up.

1. Turn on the power to the computer. You will hear one or two beeps and see an H: in the upper left-hand corner of the screen.

2. Determine which drive is the boot drive by following the procedure in step 4 **without** putting a diskette in **any** drive. The red light on one and only one drive should come on after you press the RETURN key. Then reset the computer by simultaneously depressing the RESET and right-hand SHIFT keys. Now insert the diagnostic diskette into the boot drive as follows:

   - Soft-sectored diskette if the boot drive is connected to the Z-89-37.

   - Hard-sectored diskette if the boot drive is connected to the H-88-1.

- If none of the drive lights turn on, or if more than one turns on, it will be necessary to refer to "Reconfiguration" to define one and only one boot drive. (NOTE: If no lights turned on, be sure power was applied to any external drive(s) before you assume that you will have to reconfigure the drives.)

3. Close the door.

4. Type the letter B and then press the RETURN key. The terminal will display:

```
H: Boot
```

You will hear some clicking noises from the disk drive and its light will turn on and then off again. This is normal.

Press the SPACE bar several times.

You will hear clicking noises whenever the computer is reading from or writing to the diskette. The clicks will continue for about 15 seconds. Then the terminal will display the diagnostic program's main menu, as follows:

```
ZENITH DATA SYSTEMS Z-37 SUPPORT SYSTEM

ENTER THE NUMBER CORRESPONDING TO THE TYPE OF PROGRAM
YOU WISH TO RUN.

1. DISK CONTROLLER CHECKOUT

2. GENERAL DRIVE/CONTROLLER DIAGNOSTIC

YOUR CHOICE ->
```

From this main menu, you can select either diagnostic utility. To select an option, simply type the number which corresponds to the option. When you are finished running any of these options, the system will return you to this diagnostic program's main menu.

Whenever the main menu is displayed, you can safely remove all diskettes and turn off the power.

The various menu options are discussed in detail on the following pages.

DISK CONTROLLER CHECKOUT

The Disk Controller Checkout is used to verify the operation of the Double-Density Disk Controller circuit board. This diagnostic program turns on the disk drive motors, loads the disk drive read/write heads as a program would if it were trying to read from or write to the disk, and then tries to position and reposition the read/write head. If the program can successfully complete all these tests, it will print a message which indicates that the controller works properly. If the program cannot successfully complete any test, it will print an error message which tells you how to correct the problem.

The Disk Controller Checkout diagnostic will refer to various drive numbers. These numbers are the drive hardware unit numbers, and they range from 0 (zero) through 2. Pay close attention to which number the program associates with a drive as it activates it. This "drive hardware unit number" will be referred to frequently throughout these diagnostics.

To run the Disk Controller Checkout, select diagnostic program's main menu option 2. The system will print:

```
DETAILED CONTROLLER CHECKOUT.

THIS PROGRAM ATTEMPTS TO VERIFY THE OPERATION
OF THE H-37 DISK CONTROLLER BOARD.


PLEASE ANSWER THE FOLLOWING QUESTIONS WITH 'Y'
FOR YES AND 'N' FOR NO, BY LOOKING AT YOUR
DISK DRIVES AND VERIFYING PROPER OPERATION.

ARE ALL DRIVE MOTORS TURNING?
```

To respond, open the doors of the drives on your Z-37(s). On the right-hand side of the drive, about two inches back from the drive door, is a metal cylinder which measures about an inch in diameter. Make sure this cylinder is turning in each of the drives in your Z-37(s). It does not matter whether this cylinder is turning in any drives connected to an H-88-1 hard-sectored controller.

If all the cylinders are turning, respond Y. Otherwise, respond N and turn to Page 14 for an explanation of the message you receive.

If you have responded Y to the preceding question, the program will print:

```
SELECTING DRIVE ZERO.

IF THIS IS A NON-EXISTENT DRIVE FOR YOUR SYSTEM,
ANSWER 'Y' TO THE FOLLOWING QUESTION.

IS DRIVE SELECT LIGHT ON AND HEAD LOADED?
```

Note that this "Drive Zero" is the drive which you normally use to boot-up, unless you are booting from a hard-sectored diskette that is connected to a single-density controller.

To respond to this question, check to make sure the red light on drive 0 is glowing. If it is, enter Y. Otherwise, enter N and turn to Page 14 for an explanation of the message you receive.

If you have responded Y to the preceding question, the system will print:

```
SELECTING DRIVE ONE.

IF THIS IS A NON-EXISTENT DRIVE FOR YOUR SYSTEM,
ANSWER 'Y' TO THE FOLLOWING QUESTION.

IS DRIVE SELECT LIGHT ON AND HEAD LOADED?
```

To respond to this question, check to make sure the red light on drive 1 is glowing. If it is, enter Y. Otherwise, enter N and turn to Page 14 for an explanation of the message you receive.

The program will continue to activate the drives in this way for drive two. You should respond Y if the drive exists and the red light glows, and N only if the drive exists but the drive light does not come on.

If all the drive motors work properly and the program was able to successfully select all the drives, the system will now print:

```
VERIFYING HEAD POSITIONING SYSTEM. STAND BY...
```

The program will now attempt to position and reposition the disk drive read/write head, much as it would as if it were reading from or writing to a diskette. If this test is successful, the program will print:

```
CONTROLLER APPEARS TO BE OK. PLEASE CONTINUE
ON TO SELECTION 3 TO MAKE FURTHER CHECKS.
```

If you do not receive this message, refer to the following messages below for an explanation of the error message you receive.

DISK CONTROLLER CHECKOUT MESSAGES

Prompt: `ARE ALL DRIVE MOTORS TURNING?`

If they are not turning, be sure that power is applied to the unit, and the cables are plugged in correctly. Then repeat this test.

First, check to make sure that the power to the drive is on. If the power is on, check the connection of the ribbon cable on the controller circuit board (this is the third circuit board to the immediate left of the disk drive). If the ribbon cable is connected correctly, compare the jumper selection on the controller with the section selections given in "Reconfiguration" on Page 25. Then repeat the test.

Prompt: `IS DRIVE SELECT LIGHT ON AND HEAD LOADED?`

If not, be sure that the drives are jumpered for the proper drive select, and that inboard drive jumper is in the proper position. Then repeat this test.

Check the drive jumpers on the disk controller board against the settings given in "Reconfiguration" on Page 25. Then repeat the test.

Prompt:
```
ATTEMPTING TO VERIFY THE OPERATION OF THE
HEAD POSITIONING SYSTEM. PLEASE STAND BY...
```

If there is no track indication, check the head movement and indicator operation.

If you receive this error, call Heath or Zenith Technical Consultation for assistance.

GENERAL DRIVE/CONTROLLER DIAGNOSTIC

The General Drive/Controller Diagnostic, or TEST, is a diagnostic utility used to test soft-sectored 5.25-inch diskettes and 5.25-inch disk drives. TEST verifies the drive rotational speed, drive step rate, read/write mechanism, and the quality of the recording surface of the diskette used for the tests.

You must format the diskette which you use to perform the TEST diagnostics specifically for these diagnostics, using the TEST F (format disk) option, before you run tests. Furthermore, the disk which you use to perform the diagnostics must not have been used with any other drive diagnostics. After you use the diskette to perform TEST tests, use an operating system disk formatting program (CP/M FORMAT or HDOS INIT) before you actually use the diskette for data or program storage.

The amount of time you need to run the tests varies with the number of sides and the density of the media under test. It will take about two hours to run all tests using a single-sided, single density diskette. It will take about four and a half hours to run all tests using a double-sided, double density diskette.

Initiating the General Drive/Controller Diagnostic

To run TEST, boot up using the Diagnostic Utilities diskette and then select menu option 3.

TEST will explain itself and ask whether you want to proceed. If you type YES and press RETURN, the program will continue. If you type NO and press RETURN, TEST will return you to the diagnostic programs main menu.

At this point, you should remove all disks.

If you have chosen to continue, TEST will now ask for the hardware unit number of the drive you want tested. For example:

```
WHICH DRIVE (0/1/2/3)?
```

At this prompt, enter the hardware unit number of the drive which you want to test and press RETURN. If this is your first time through the test, we recommend that you test drive 0. After you have selected a drive number between 0 and 2, TEST will print the following menu:

```
FUNCTIONS AVAILABLE:

T - DISPLAY DRIVE ROTATIONAL SPEED        U - SELECT ANOTHER DRIVE UNIT
D - GENERAL DRIVE CHECKOUT                E - EXIT TO BOOT PROGRAM
M - MEDIA CHECK (SECTOR VALIDITY)         A - ALIGN DRIVE HEAD
S - PERFORM SEEK TIME CHECKOUT            F - FORMAT DISK

CTRL-C CANCELS THE TEST IN PROGRESS.
 OPTION:
```

To start any test, type the letter which precedes the name of the test in the TEST menu and then press RETURN. Since you must format the diskette before performing any tests, select menu option F and press RETURN.

Available Tests and Options

The following sections describe the various tests and the options available. To end any test or menu option early, hold down the CTRL key and simultaneously type the letter C.

F — Format Disk Surface

The Format Disk Surface option prepares a soft-sectored blank diskette for use with the TEST diagnostics. Use the Format Disk Surface option with any diskette which has not previously been formatted for TEST.

The format option begins by instructing you to insert a diskette. For example:

```
INSERT THE VOLUME YOU WISH TO FORMAT INTO DRIVE N,
REMEMBER, ANY DATA ON THIS VOLUME WILL BE DESTROYED.

HIT RETURN WHEN READY.
```

At this point, insert a soft-sectored diskette into the drive whose hardware number the program substituted for N in the sample message given above. When you have inserted the diskette, press RETURN. Be sure the diskette you insert is either blank or does not contain any valuable information, since the format option destroys all information on the diskette which it formats.

When you have inserted a soft-sectored diskette and pressed RETURN, the system will print:

```
DOUBLE DENSITY <YES> ?
```

If you want the formatted diskette to be double-density, simply press RETURN; if you want the formatted diskette to be single-density, type NO and press RETURN. The system will then print:

```
DOUBLE SIDED <YES> ?
```

To create a double-sided diskette (if you have drives that handle double-sided diskettes), simply press RETURN. If you want to create a single-sided diskette, enter NO and press RETURN. The system will then print:

```
80 TRACKS <YES> ?
```

To create a double-track density diskette (80 tracks instead of 40 — again, you **must** have the proper drives), press RETURN. To create a single-track density diskette (40 tracks), enter NO and press RETURN.

When you have responded to the message which asks how many tracks you want on the formatted disk, TEST will begin to format the tracks on the blank diskette. When it has finished formatting the disk, the system will print the TEST menu again.

If you want to format more diskettes at this point, insert another blank, soft-sectored diskette and press F. If you do not want to format more diskettes, select the option that you do want.

T — DRIVE SPEED

The drive speed test checks the rotational speed of your drive. During this test, the screen will display the relative rotational speed of the drive under test. A series of decimal numbers, which should be close to 1.000, will scroll up the screen, updating as they scroll. The rotational speed tolerance is one percent. The final value may safely range anywhere from 0.990 and 1.010. Do not adjust the speed unless it is out of tolerance. Allow this test to run for about 30 seconds; then type CTRL-C.

If there are any numbers displayed on the terminal which are less than 0.990 or greater than 1.010, restart the test and carefully adjust the speed adjustment control on the drive with a small screwdriver until the number is within tolerance. The speed adjustment control may be extremely sensitive, so if an adjustment is necessary, do not turn it far in either direction.

You may wish to perform this test periodically, depending on how heavily your drive is used. The linear servo loop which regulates the drive rotational speed makes this speed stable. But as the drive bearings wear, the speed may change slightly. Fluctuations within the tolerance are normal and may be attributed to variations in temperature and humidity.

D — GENERAL DRIVE CHECKOUT

The purpose of the General Drive Checkout is to verify that your system is reading from and writing to the diskette properly. Each sector on the diskette is written to and read from a number of times. Various patterns are written on the diskette to allow testing of the head seek mechanism and the read-write head itself. The test is repeated three times. Do not be alarmed if this test seems to take an abnormally long time to finish. It is a very thorough test, and requires from 45 minutes to an hour and a half to complete. The duration of the test will depend on the type of media you use for the test. Run this test again only if you encounter problems.

While each pass is being executed, the program will print the letters "ABCDEFG", one after the other, at intervals of a few minutes. These letters indicate the various phases of the test and give you an idea of how far it has progressed.

TEST will print an "END OF PASS" message at the end of each pass. There are two possibilities. If everything proceeds normally, the output for the pass will read:

```
ABCDEFG END OF PASS n
```

However, if the test discovers any problems on the current pass, the output will include the number of "hard" (h) and "soft" (s) errors, as follows:

```
ABCDE hhh/sss FG END OF PASS n
```

In this example, test E has errors. The tests corresponding to each letter are:

A = Write all zeroes
B = Read all zeroes
C = Write all ones
D = Read all ones
E = Write identification pattern
F = Read identification pattern
G = Random read/write test

The number of "hard" and "soft" errors is indicated by the numbers "hhh" and "sss", respectively. Let the test run through all three passes, even if it discovers errors.

Soft errors usually indicate that the disk drive temporarily had difficulty reading from or writing to the diskette. The difficulty may occur because of dust, noise, static electricity, etc. Occasional soft errors, no more than one or two per hour over a several hour period, are nothing to be concerned with. You may correct them by simply repeating the failed process.

If after performing ten retries (in an attempt to correct a soft error) the program still cannot perform the read or write operation, TEST reclassifies the soft error as a hard error. Hard errors are caused by malfunctions in the electronic or electromechanical hardware and/or defective diskettes.

If you have hard errors, the best approach is to exit this program (type E at the option menu), format another blank diskette, and repeat the entire TEST procedure. If this approach is successful, it is probably because the first diskette had one or more bad sectors, possibly caused by dust. If replacing the diskette corrects the hard errors, continue through the other TEST options and then use the "U" option to restart TEST. Then insert the bad diskette and perform "Media Check" in order to identify bad sectors. If the diskette contains bad sectors, put it aside. Do not use a defective diskette to store data or programs.

Hard errors on the inside (high numbered) tracks will usually result if you use double-density, double-sided, 80-track operation with diskettes not certified for such use.

If you are getting both hard and soft errors, and "Media Check" finds nothing wrong with the "bad" disk, you may have hardware problems.

If changing the diskette does not correct the problem, or if you do suspect that you have hardware problems, refer to the "In Case of Difficulty" section of your Drive's Operation Manual.

M — MEDIA CHECK

The Media Check will examine the diskette under test for defects in the magnetic oxide recording medium. If you had any hard or soft errors during the General Drive Checkout, defects in the diskette medium could be the cause. If the media check finds any bad sectors, the bad sector numbers will be listed at the end of the test. Run this test on all new diskettes to confirm the quality of the medium.

The Media Check will take anywhere from 20 to 45 minutes. At the end of the test, the following message will be printed:

```
nnnn BAD SECTORS LOCATED
```

The number "nnnn", which can range from 0000 to 2879, tells how many of the sectors on the diskette under test are defective. The numbers of any bad sectors will also be listed. Record the numbers for future reference. If the media check discovers a bad sector, put the diskette which contains the bad sector aside. Do not use it to store data or programs. However, disks which have errors in double-density or double-sided use may still be suitable for single-density or single-sided use. After formatting the defective double-density diskette in single-density, you may retest the diskette with the Media Check program for single-density use.

S — SEEK TIME

This test will vary the track seek time of your drive in order to determine its highest reliable speed. The drive assemblies are guaranteed to perform reliably at a seek time of 30 milliseconds per track.

The maximum seek speed may change as the drive unit becomes "broken in". If frequent read errors occur with one of your drives, you should re-run TEST to check for possible changes in the drive speed.

The first speed to be tested is 30 milliseconds per track. The program will attempt faster step rates of 20, 12, and 6 milliseconds until it has determined your drive's fastest reliable seek time. As it tests, the program will print what speed it is attempting. For each successful pass, TEST will print the message "OK!" to indicate that the drive performs reliably at that speed.

When the seek time test is complete, the message "Drive performs reliably at nn milliseconds per track" will be printed, where "nn" is the optimum seek time of your drive. Record this number for future reference.

Note that if TEST attempts a pass at 6 milliseconds per track, it may not print the "Drive performs reliably..." message, but instead may simply stop execution. If the test attempts a speed of 6 milliseconds per track but fails to print the "Drive performs reliably..." message, then the fastest reliable seek time is 12 milliseconds/track. If the test stops executing without printing any message, type CTRL-C before you proceed to the next test.

You will probably want to perform this test on your other drives in order to determine the seek speed for all drives in the system. To do this, use the "U" TEST menu option to change the drive to be tested; then run the seek time test again. Set your operating system seek speed to that of the slowest drive in your system unless it has the ability to use different speeds for different drives. Refer to your software manual for instructions in setting seek time.

The single-sided, single-density disk drive units (H-17-1) supplied by Zenith Data Systems have a guaranteed seek time of 30 milliseconds. While many of these drives may perform properly at a faster seek time, you run certain risks by setting your hard-sectored disks to operate at these faster speeds.

1. If you have only one drive, and ever need to replace it, the new drive may not operate at the faster speed. Then your disks will not work in the new drive and you will not be able to reset the seek time on the disks.

2. If you have more than one drive, and one of them ever needs to be replaced, then your disks will have to be reset to operate with the slowest of the drives.

Therefore, set the seek time of your diskettes to a speed which you feel is reasonable. As we said, the single-sided H-17-1 drives are guaranteed to operate at 30 milliseconds. The double-sided H-17-4 disk drives are rated at 6 milliseconds.

A — ALIGN

NOTE: This procedure is for authorized service personnel only. Unauthorized use may void your drive warranty.

The Align menu option is used to align the disk drive read/write head. To use this option you will need an alignment diskette and a dual-trace oscilloscope with algebraic add. This option causes the disk drive read/write head to select a track on the disk which you specify. The drive will continue to select the track while you adjust the alignment. You can then respecify track numbers, continuing this procedure until the tracks on the alignment diskette produce the desired displays on the oscilloscope. **Be sure to read the disk drive manufacturer's instructions and the alignment disk manufacturer's instructions before using this program.**

To use the Align option, enter A and press RETURN when the TEST menu is displayed. The program will print:

```
                RADIAL HEAD ALIGNMENT:
WARNING -- CHECK YOUR MANUAL BEFORE PROCEEDING
INSERT THE ALIGNMENT DISKETTE IN DRIVE N
HIT RETURN WHEN READY?
```

The program will have substituted the hardware number of the drive you have been testing for the N in the sample message given above.

To begin the alignment procedure, insert the alignment diskette into the drive whose hardware configuration number appears in the message and press RETURN. The program will print:

```
ENTER TRACK NUMBER <0>
```

At this point, enter the first track number (as directed by the manual provided with the alignment disk) and press RETURN. The system will then print:

```
ENTER SIDE NUMBER <0>
```

Enter the side number (as per the directions provided with the alignment disk and/or disk drives) and press RETURN. The system will print:

```
CTRL-C -- REQUEST ANOTHER TRACK
CTRL-C -- RETURN TO MENU
```

This message instructs you to type CTRL-C once to change the track number which you entered above, or type CTRL-C twice in succession to return to the TEST menu.

You will probably need to change the track number at least twice, but this will vary, and you should follow the alignment disk and disk drive manufacturer's instructions. To change the current track number, type CTRL-C once. The program will print:

```
ENTER TRACK NUMBER <0>
```

Now enter the new track number and press RETURN. The system will again print:

```
CTRL-C -- REQUEST ANOTHER TRACK
CTRL-C -- RETURN TO MENU
```

When you have selected all tracks designated in the manufacturer's instructions, and achieved the desired oscilloscope displays for all designated tracks, type CTRL-C twice in succession to return to the TEST menu.

U — SWITCH

This procedure will restart TEST, thereby enabling you to select another drive unit to be tested, or to insert a new diskette. After you have typed U and pressed RETURN, TEST will restart itself. When you are asked which drive you want to test, enter the hardware number of the drive you want to test. You can change the diskette when you are asked to insert the diskette you wish to use for this test. If you are inserting a new diskette, be sure to use TEST menu option F to format the diskette before you perform tests.

Note that using the "U" option will enable you to alternate among your drives for as long you as wish to test them.

E — EXIT

To exit TEST, type E and press RETURN. This will return you to the diagnostic program's main menu.

DECIMAL TO OCTAL TO HEX TO ASCII CONVERSION

I				II				III				IV			
DEC	OCT	HEX	ASCII	DEC	OCT	HEX	ASCII	DEC	OCT	HEX	ASCII	DEC	OCT	HEX	ASCII
0	000	00	NUL	32	040	20	SPACE	64	100	40	@	96	140	60	'
1	001	01	SOH	33	041	21	!	65	101	41	A	97	141	61	a
2	002	02	STX	34	042	22	"	66	102	42	B	98	142	62	b
3	003	03	ETX	35	043	23	#	67	103	43	C	99	143	63	c
4	004	04	EOT	36	044	24	$	68	104	44	D	100	144	64	d
5	005	05	ENQ	37	045	25	%	69	105	45	E	101	145	65	e
6	006	06	ACK	38	046	26	&	70	106	46	F	102	146	66	f
7	007	07	BEL	39	047	27	'	71	107	47	G	103	147	67	g
8	010	08	BS	40	050	28	(	72	110	48	H	104	150	68	h
9	011	09	HT	41	051	29	)	73	111	49	I	105	151	69	i
10	012	0A	LF	42	052	2A	*	74	112	4A	J	106	152	6A	j
11	013	0B	VT	43	053	2B	+	75	113	4B	K	107	153	6B	k
12	014	0C	FF	44	054	2C	,	76	114	4C	L	108	154	6C	l
13	015	0D	CR	45	055	2D	-	77	115	4D	M	109	155	6D	m
14	016	0E	SO	46	056	2E	PERIOD	78	116	4E	N	110	156	6E	n
15	017	0F	SI	47	057	2F	/	79	117	4F	O	111	157	6F	o
16	020	10	DLE	48	060	30	0	80	120	50	P	112	160	70	p
17	021	11	DC1	49	061	31	1	81	121	51	Q	113	161	71	q
18	022	12	DC2	50	062	32	2	82	122	52	R	114	162	72	r
19	023	13	DC3	51	063	33	3	83	123	53	S	115	163	73	s
20	024	14	DC4	52	064	34	4	84	124	54	T	116	164	74	t
21	025	15	NAK	53	065	35	5	85	125	55	U	117	165	75	u
22	026	16	SYN	54	066	36	6	86	126	56	V	118	166	76	v
23	027	17	ETB	55	067	37	7	87	127	57	W	119	167	77	w
24	030	18	CAN	56	070	38	8	88	130	58	X	120	170	78	x
25	031	19	EM	57	071	39	9	89	131	59	Y	121	171	79	y
26	032	1A	SUB	58	072	3A	:	90	132	5A	Z	122	172	7A	z
27	033	1B	ESC	59	073	3B	;	91	133	5B	[	123	173	7B	{
28	034	1C	FS	60	074	3C	<	92	134	5C	\	124	174	7C	|
29	035	1D	GS	61	075	3D	=	93	135	5D	]	125	175	7D	}
30	036	1E	RS	62	076	3E	>	94	136	5E	^	126	176	7E	~
31	037	1F	US	63	077	3F	?	95	137	5F	_	127	177	7F	DELETE

RECONFIGURATION

NOTICE: If you are expanding an existing system using CP/M and want to configure your system with one hard-sector and two soft-sector drives, you must run the MAKEBIOS utility program as explained in your Heath/Zenith Data Systems CP/M 2.2 Manual and configure a CP/M diskette prior to installing the new controller and reconfiguring your disk drives. CP/M version 2.2.03 or later must be used. 2.2.02 will not work.

To reconfigure your system, choose the instructions below that fit your application and perform those steps.

TO CHANGE THE INTERNAL DRIVE. . .

To change the internal drive from handling hard-sectored diskettes to handling soft-sectored diskettes:

Refer to Pictorial 3 (Illustration Booklet, Page 1) for the following steps.

( ) Open the cabinet shell. (See Pictorial 1, Page 4.)

( ) Unplug the short floppy cable from the H-88-1 Floppy Disk I/O circuit board and reconnect it to the top connector of the Z-89-37 Disk Controller.

( ) Set switch SW501, section 4 (on the CPU logic circuit board) to 1. The externally connected drives are now the primary drives and they are now numbered as shown in Pictorial 4. (NOTE: If you remove the unused H-88-1 Floppy Disk I/O board, you must connect a 4700 ohm resistor to plug P512 between pins 1 and 12. See Detail 3A.)

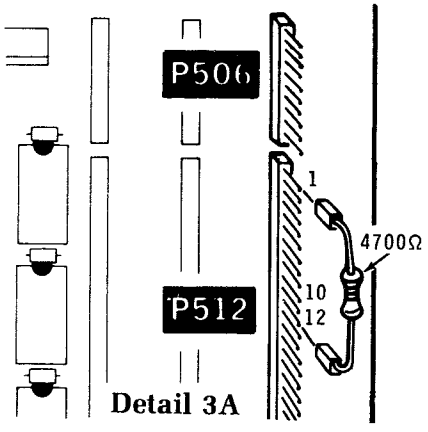

Detail 3A

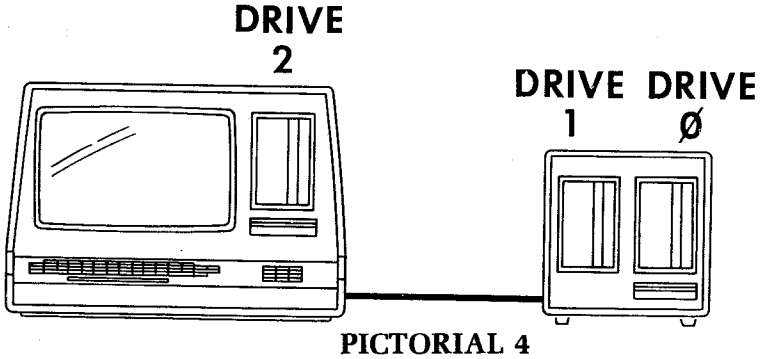

PICTORIAL 4

TO REARRANGE THE DRIVE NUMBERS . . .

Refer to the following chart and Details 4A through 4F, and select the configuration that fits your situation. Configuration E is normally used for transferring data and programs from hard-sectored disks to soft-sectored disks.

After you select the configuration you want, program the drives as shown. You can do this programming by physically interchanging preprogrammed drives, interchanging the programming plugs, cutting the programming plugs (if presently uncut); or by replacing the programming plug with a properly set dip switch (not supplied).

USING BOTH CONTROLLERS

When you are using both the H-88-1 controller (single-density) and H-89-37 controller (double-density); you may configure two drives, one for each controller, as drive 0. See Detail 4F. With this arrangement, it is possible to boot from either drive 0.

When you boot from drive 0 under one controller, the other controller's drives become secondary drives and are signified, starting with secondary drive 0, as DKO under HDOS or drive D: under CP/M. Refer to your respective system reference manual for more information.

FLOPPY DISK CONTROLLER BOARD(S)	TYPES OF DRIVES: • 48 TPI (H-17-1) • TPI (H-17-4)	COMMENTS
A H-88-1	48 TPI (H-17-1) only. Internal drive present.	Terminating pack should be installed in drive.
B H-88-1	48 TPI (H-17-1) only. Internal drive present	Terminating packs should be installed in indicated drives.
C H-88-1	48 TPI (H-17-1) Internal drive absent	Terminating pack should only be installed in indicated drive.
D Z-89-37	Either* Internal drive present	Terminating packs should be installed in indicated drives. Set Z-89-37 jumper to J4.
E Z-89-37	Either* Internal drive absent	Terminating pack should only be installed in indicated drive. Set Z-89-37 jumper to J7.
F H-88-1 & Z-89-37	Either* Internal drive present	Terminating packs should be installed in indicated drives. Set Z-89-37 jumper to J6.

*All drives connected to the Z-89-37 should be of the same type, either 48 TPI (H-17-1) or 96 TPI (H-17-4).

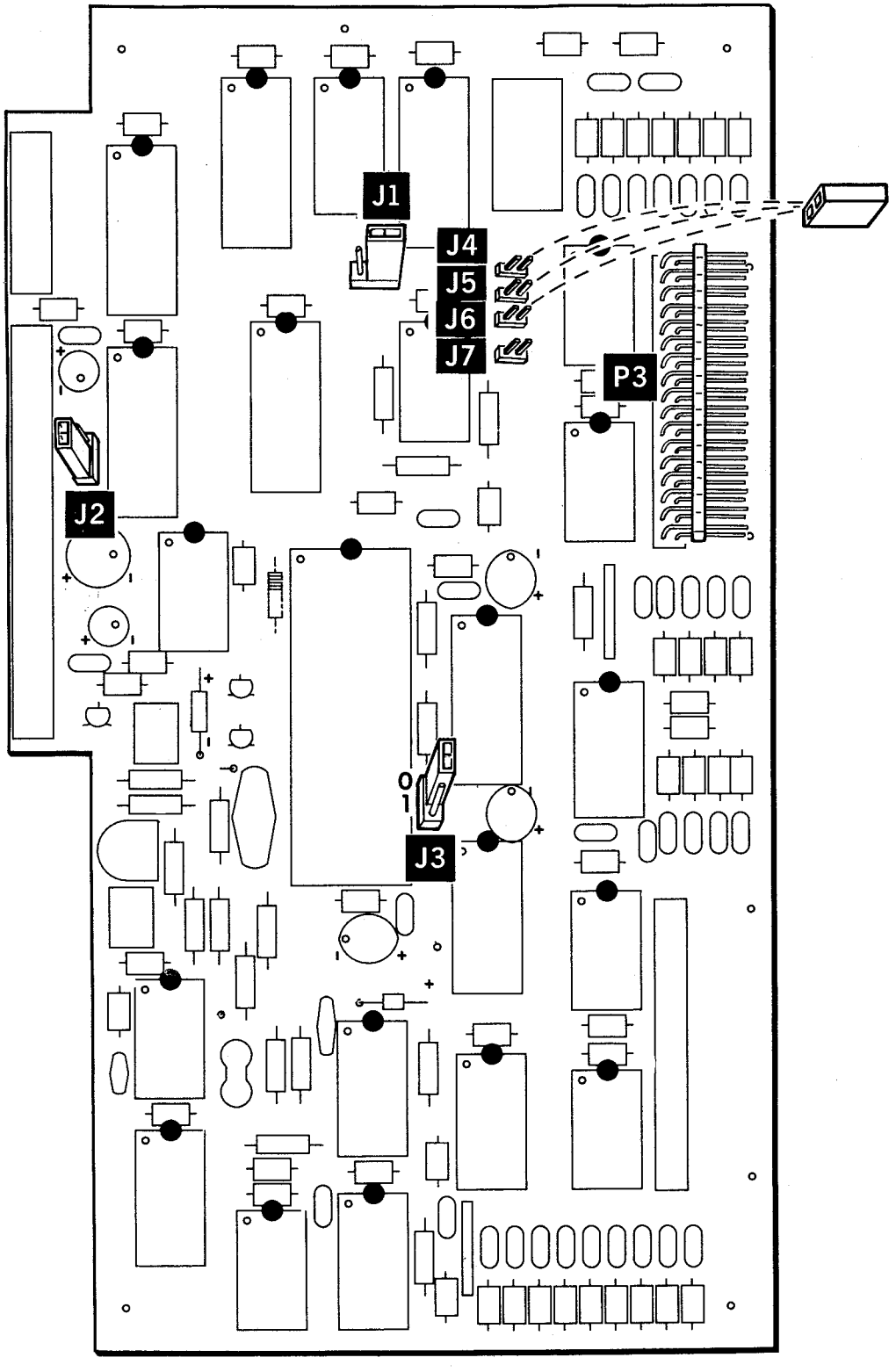

PICTORIAL 6

PROGRAMMING PLUGS

Refer to Pictorial 6 as you read the following information.

Use the following information for any special configurations that you may want.

Programming plugs:

J1 & J2 — Select port 170 or 174 (Both jumpers must be at 170, or both jumpers must be at 174. 170 is normal.)

J3 — 1 = No precompensation; 0 = precompensation. (1 position is normal.) Use "0" if any of your drives are 48 TPI Wangco Model 82 (#150-71) drives. Otherwise, use "1."

We recommend that you do not use both 48 and 96 TPI drives in the same system, since the precompensation will be wrong for at least one of the drives. This can result in reduced data reliability. When precompensation is selected, it is factory pre-set to 300 nanoseconds.

J4 — J7 — Selects which drive is connected to plug P3. (Drive numbers are determined by how the drive programming modules are cut. See Pictorial 5.)

J4 = DS1
J5 = DS2
J6 = DS3
J7 = DS4 (presently not supported)

IN CASE OF DIFFICULTY

If your system does not operate properly, make the following checks.

PROBLEM	POSSIBLE CAUSE
Drive access light does not turn on when disk is booted.	1. Check for proper connections of floppy cable inside Computer. 2. Check for proper connections of rear panel extension cable inside Computer. 3. Be sure Z-37 or Z-87 is turned on. 4. Check positions of J1 and J2 on Z-89-37 circuit board. 5. Check U550 for correct part and installation.
Drive access light turns on but drive makes an unusual clicking sound.	1. Check positions of J4 through J9 on Z-89-37 circuit board.
All disk access lights turn on and remain on.	1. A cable is connected with marked edge on the wrong side.
Two drives turn on when a boot operation is selected.	1. Two drives have their disk selection jumpers programmed the same. See "Reconfiguration" on Page 25.
Computer only beeps once when turned on.	1. OFF LINE key in down position. Should be up. 2. U550, U516, or U518 installed incorrectly. 3. 3" jumper wire installed incorrectly. 4. 16-conductor cable with plugs installed incorrectly.
Computer will not accept boot command, returns to H: prompt, or starts to boot but does not return to H: prompt without reset.	1. Be sure disk is installed in selected drive before boot command is given. 2. If H-88-1 disk I/O is not installed, check for proper installation of the 4700 Ω resistor with connectors.